VICOR CONFIDENTIAL

THIS DOCUMENT AND THE DATA DISCLOSED HEREIN OR HEREWITH IS NOT TO BE REPRODUCED, USED OR DISCLOSED IN WHOLE OR IN PART TO ANYONE WITHOUT THE PERMISSION OF VICOR CORP.

REV.	DESCRIPTION	INTL	DATE	APVD
1	RELEASE PER E180875a	REJH	12/26/18	WJ
2	REVISED PER E190580	GCK	12/17/19	WJ
3	REVISED PER E200106	PNP	03/04/20	WJ
4	REVISED PER E210349	MSW	04/29/21	CAD

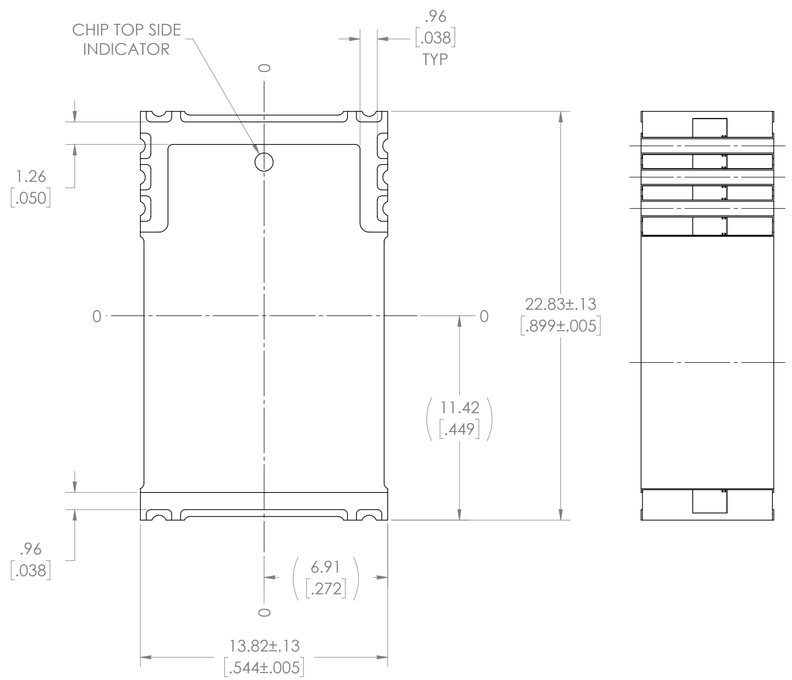

TOP VIEW (COMPONENT SIDE)

2313 PRM TC2_3

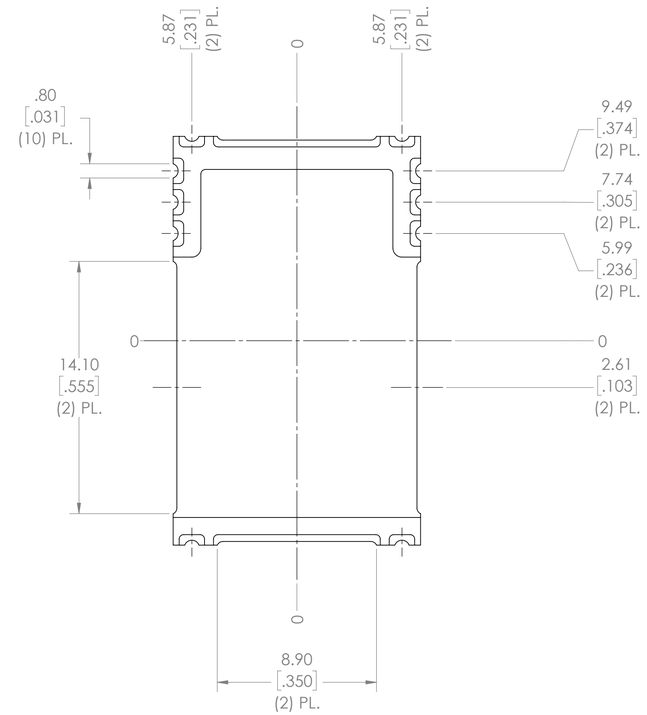

BOTTOM VIEW

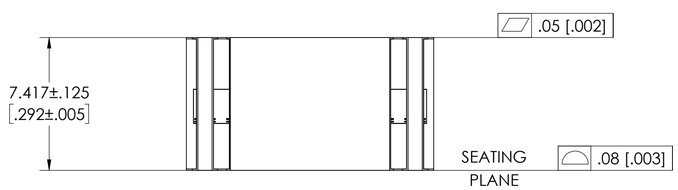

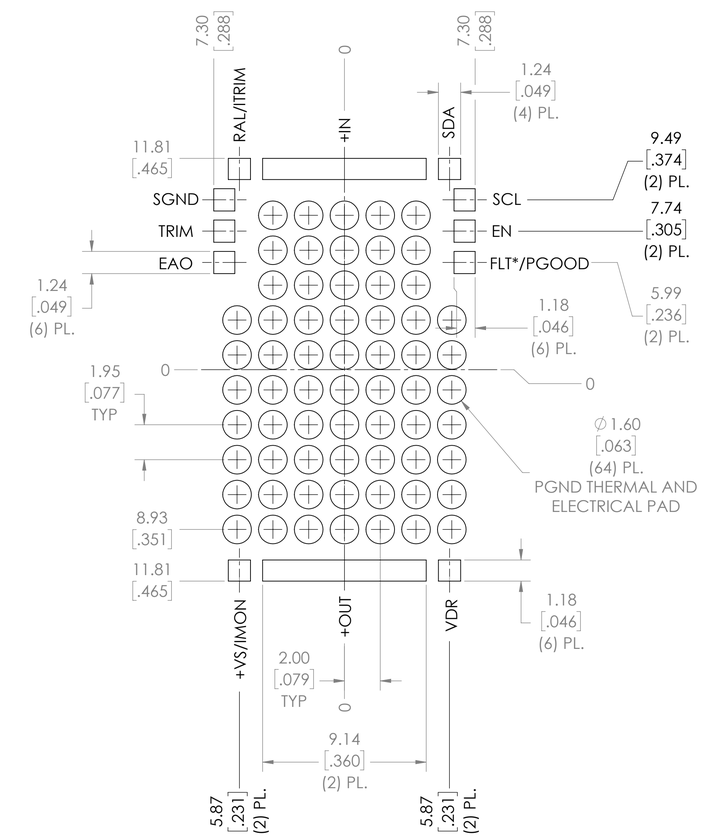

RECOMMENDED LAND PATTERN 2313 PRM TC2_3 (COMPONENT SIDE)

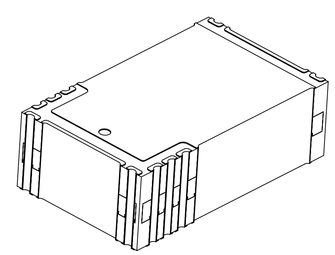

NOTES:

1- RoHS COMPLIANT, LEAD FREE PER CST-0001, LATEST REVISION.

DRAWN BY	DATE
R.E.J. Hickey	05/21/2018

UNLESS OTHERWISE SPECIFIED DIMENSIONS ARE MM [INCH]
TOLERANCES ARE:
DECIMALS X.X [X.XX] = ±0.25 [0.01] X.XX [X.XXX] = ±0.127 [0.005]
ANGLES ±1°

THIRD ANGLE PROJECTION

DO NOT SCALE DRAWING

VICOR SWD

PRODUCT OUTLINE SMChiP 2313 PRM TC2_3

SIZE	CAGE CODE	DWG NO	REV
D	67131	47574	4

SCALE 6:1 SHEET 1 OF 1