VICOR CONFIDENTIAL

THIS DOCUMENT AND THE DATA DISCLOSED HEREIN OR HEREWITH IS NOT TO BE REPRODUCED, USED, OR DISCLOSED IN WHOLE OR IN PART TO ANYONE WITHOUT PERMISSION OF VICOR CORP.

REV.	DESCRIPTION		DATE	APVD
01	RELEASED PER E0230210	GCK	6/7/02	PEI
2	REVISED PER E0230494	PEI	10/8/02	JMR
3	REVISED PER E063136	AK	05/23/06	BH
4	REVISED PER E063318	GCK	9/22/06	REJH

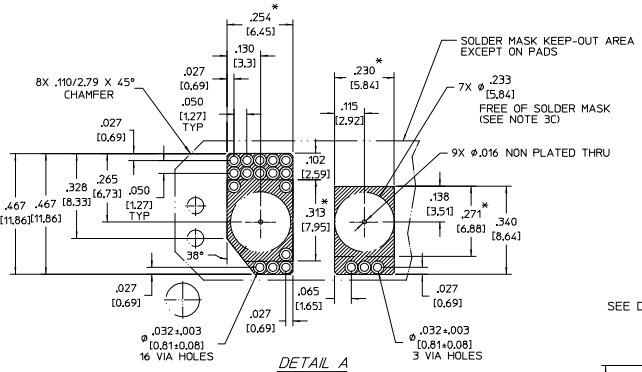

DETAIL A

SCALE: 4X

(MIRROR IMAGE TO OTHER SIDE)

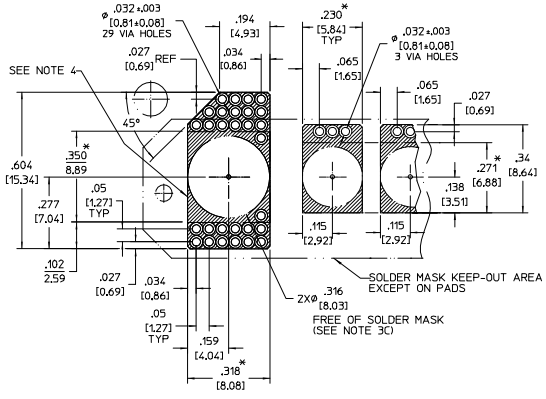

DETAIL B

SCALE: 4X

(MIRROR IMAGE TO OTHER SIDE)

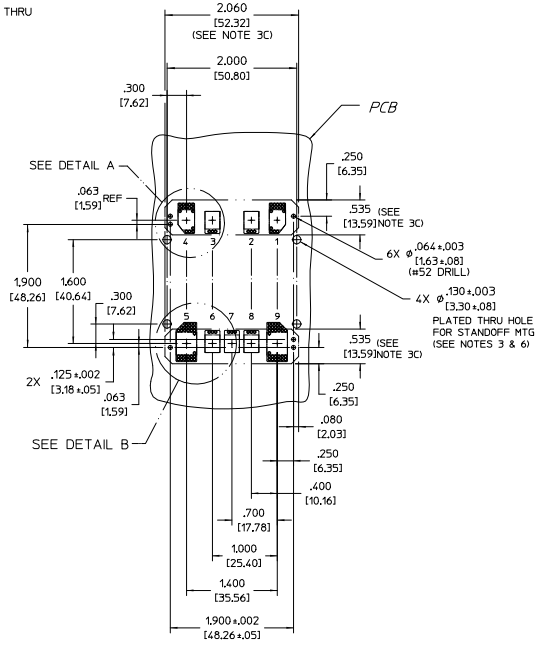

PCB MOUNTING SPECIFICATIONS

(ALSO SEE NOTE 2 & EXCHANGE TOOL DETAILS IN RIGHT VIEWS)

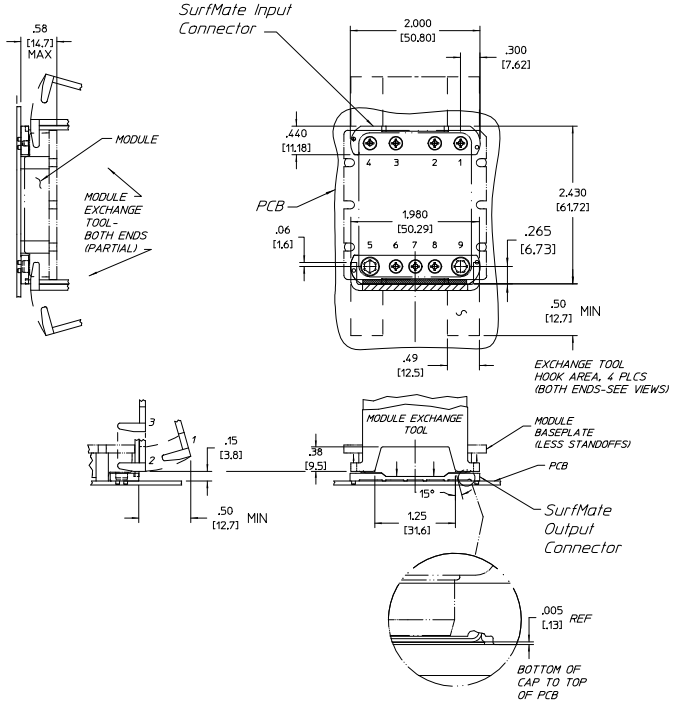

DETAIL C

SCALE: 8X

PRODUCT APPLICATION SPECIFICATIONS

(ALSO SEE NOTE 2)

NOTES:

1. MATERIAL:
   HEADERS: VECTRA E150i, LIQUID CRYSTAL POLYMER, 50% GLASS FILLED, BLACK COLOR
   SOCKET CAP: 260 CARTRIDGE BRASS, Au PLATED
   SOCKETS: Be-Cu ALLOY #25, Au PLATED
2. DIMENSIONS AND VALUES IN BRACKETS ARE METRIC.
   A. PCBS: DIMENSIONS AND TOLERANCES PER ANSI/IPC-D-300, FOR CLASS "B" BOARDS.
   B. REFER TO TOLERANCE BLOCK FOR OTHER TOLERANCES.
3. RECOMMENDED PCB CONSTRUCTION:
   A. MULTILAYER 3 OZ COPPER WITH INTERNAL POWER AND GROUND PLANES.
   B. PAD GEOMETRY AND MINIMUM NUMBER OF VIA HOLES SHOWN FOR CONNECTION TO INTERNAL PLANES.
   C. PADS TO BE COVERED WITH SOLDER MASK EXCEPT IN AREA SHOWN IN DETAILS A & B. FINAL PAD HEIGHT ABOVE LAMINATE TO BE .004 +/-.0004.
*4. STENCIL APERTURE SHOWN IN HEAVY LINE, SEE DIMENSIONS MARKED WITH * '. '
   SOLDER PASTE STENCIL THICKNESS:
   MINIMUM .006"
   RECOMMENDED .008 TO .012"
5. DURING SOLDERING, SURFMATE PART TEMPERATURES NOT TO EXCEED 455°F [235°C].
6. MODULE MOUNTING STANDOFF KITS REQUIRED.
7. MODULE EXCHANGE TOOL (VICOR PN 22827) REQUIRED FOR MODULE REMOVAL.

TABLE I

PIN NO.	MODULE INFORMATION		
	SYMBOL	FUNCTION	PIN DIA.
1	+	+IN	.080 [2.03]
2	PC	PRIM CONTROL	.080 [2.03]
3	PR	PARALLEL	.080 [2.03]
4	−	−IN	.080 [2.03]
5	−	−OUT	.150 [3.81]
6	−S	−SENSE	.080 [2.03]
7	SC	SEC CONTROL	.080 [2.03]
8	+S	+ SENSE	.080 [2.03]
9	+	+ OUT	.150 [3.81]

DRAWN BY	DATE
RCM	4/97

UNLESS OTHERWISE SPECIFIED DIMENSIONS ARE: INCH [MM] TOLERANCES ARE: (SEE NOTE 2) DECIMALS .XX= ±.01 [0.25] .XXX= .005 [0.127] ANGLES ±1°

THIRD ANGLE PROJECTION

DO NOT SCALE DRAWING

VICOR

APPS DWG, PCB SURF. MT CONN SURFMATE V1-800

SIZE	FSCM NO.	DWG NO	REV
D	67131	16808	4

SCALE | SHEET 1 OF 1