VICOR CONFIDENTIAL

THIS DOCUMENT AND THE DATA DISCLOSED HEREIN OR HEREWITH IS NOT TO BE REPRODUCED, USED OR DISCLOSED IN WHOLE OR IN PART TO ANYONE WITHOUT THE PERMISSION OF VICOR CORP.

REV.	DESCRIPTION	INTL	DATE	APVD
1	RELEASE PER E161072	GCK	11/04/16	SC
2	REVISED PER E161316a	GCK	12/28/16	REJH
3	REVISED PER E170242	GCK	03/13/17	YG
4	REVISED PER E171071a	JM	12/11/17	REJH

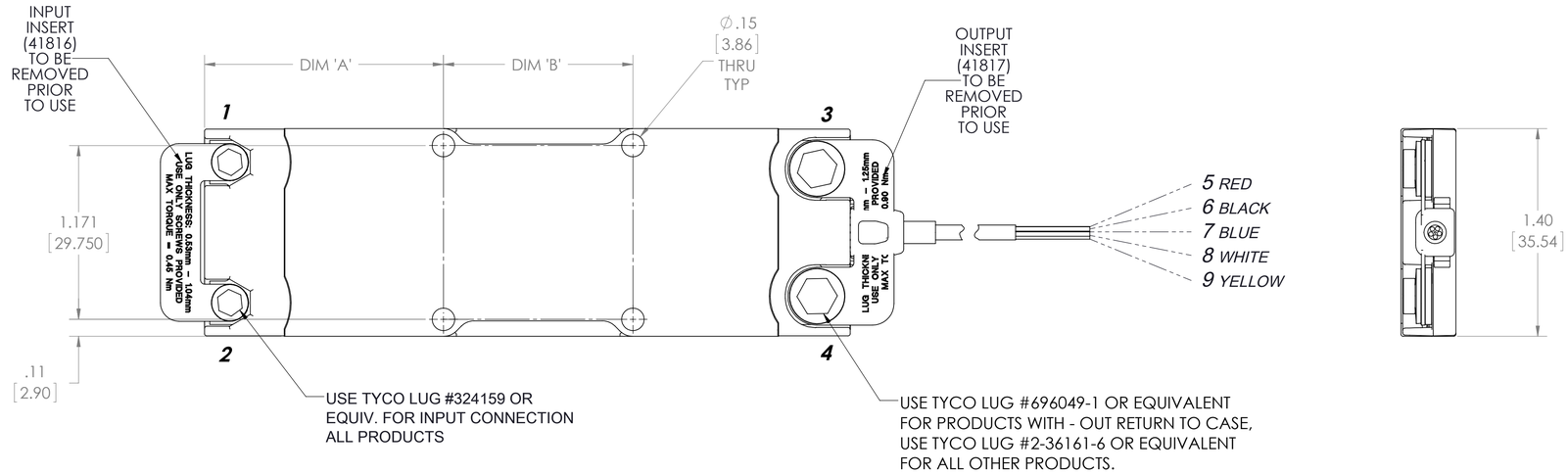

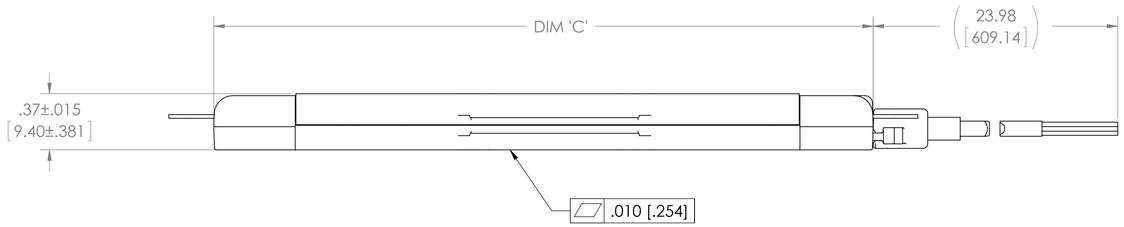

PRODUCT	DIM 'A'	DIM 'B'	DIM 'C'
3414 DCM	1.61 [40.93]	.788 [20.005]	3.38 [85.93]
3714 DCM	1.61 [40.93]	1.150 [29.200]	3.75 [95.13]
3814 NBM - OUT RETURN TO CASE	1.02 [25.96]	1.277 [32.430]	3.76 [95.59]
3814 BCM - OUT RETURN TO CASE	1.02 [25.96]	1.277 [32.430]	3.76 [95.59]
4414 BCM	1.61 [40.93]	1.757 [44.625]	4.35 [110.55]
4414 BCM - OUT RETURN TO CASE	1.61 [40.93]	1.277 [32.430]	4.35 [110.55]
4414 UHV BCM	1.65 [41.93]	1.718 [43.625]	4.35 [110.55]
4414 PFM	1.61 [40.93]	1.757 [44.625]	4.35 [110.55]
4414 PFM 3kV	1.61 [40.93]	1.658 [42.110]	4.35 [110.55]
4914 PFM	2.17 [55.12]	1.757 [44.625]	4.91 [124.75]

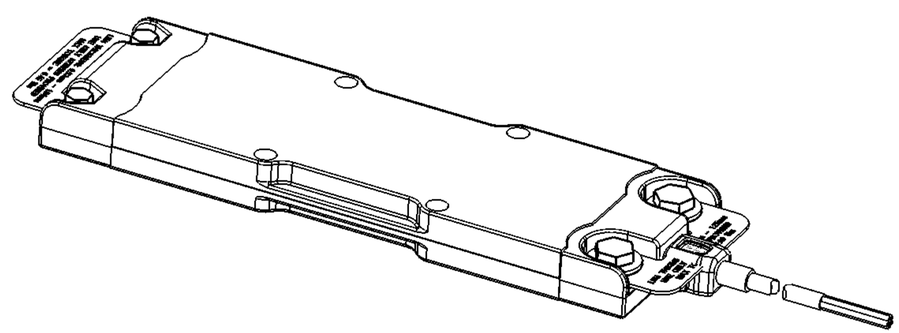

NOTES:

1- RoHS COMPLIANT PER CST-0001 LATEST REVISION.

2- SEE PRODUCT DATA SHEET FOR PIN DESIGNATIONS

DRAWN BY	DATE
R.E.J. Hickey	04/27/2016

UNLESS OTHERWISE SPECIFIED DIMENSIONS ARE : INCH / [MM]
TOLERANCES ARE:
DECIMALS X.XX [X.XX] = ±0.01 [0.25]
X.XXX [X.XXX] = ±0.005 [0.127]
ANGLES ±1°

THIRD ANGLE PROJECTION

DO NOT SCALE DRAWING

VICOR SWD

PROD OUTL, VIA, CHASSIS MNT, W/COMM.

SIZE	CAGE CODE	DWG NO	REV
D	67131	44135	4

SCALE 2:1 SHEET 1 OF 1