VICOR CONFIDENTIAL

THIS DOCUMENT AND THE DATA DISCLOSED HEREIN OR HEREWITH IS NOT TO BE REPRODUCED, USED OR DISCLOSED IN WHOLE OR IN PART TO ANYONE WITHOUT THE PERMISSION OF VICOR CORP.

REV.	DESCRIPTION	INTL	DATE	APVD
1	RELEASED PER E150474a	ESD	05/14/15	YZ
2	REVISED PER E150672	AWT	06/19/15	REJH
3	REVISED PER E150763	JF	7/22/2015	AWT

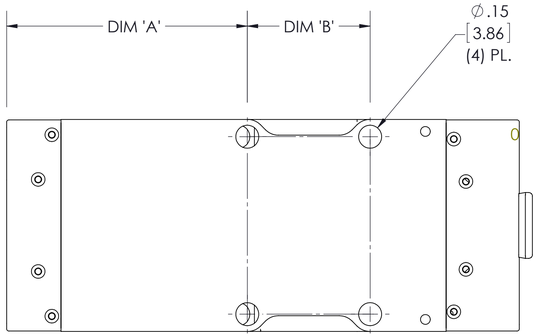

TOP VIEW
(COMPONENT SIDE)

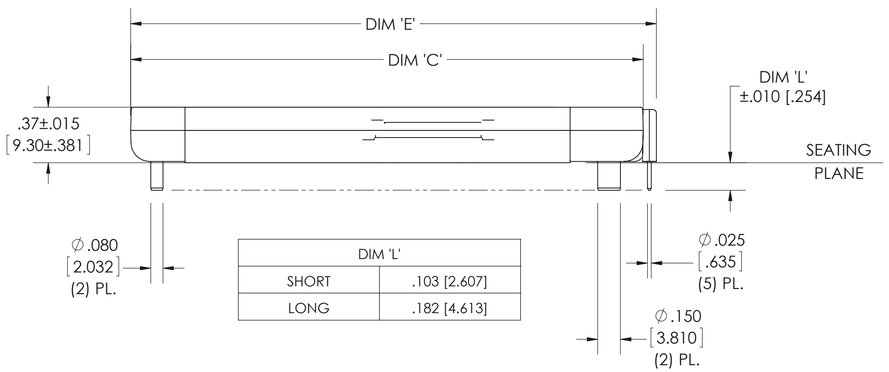

DIM 'L'	
SHORT	.103 [2.607]
LONG	.182 [4.613]

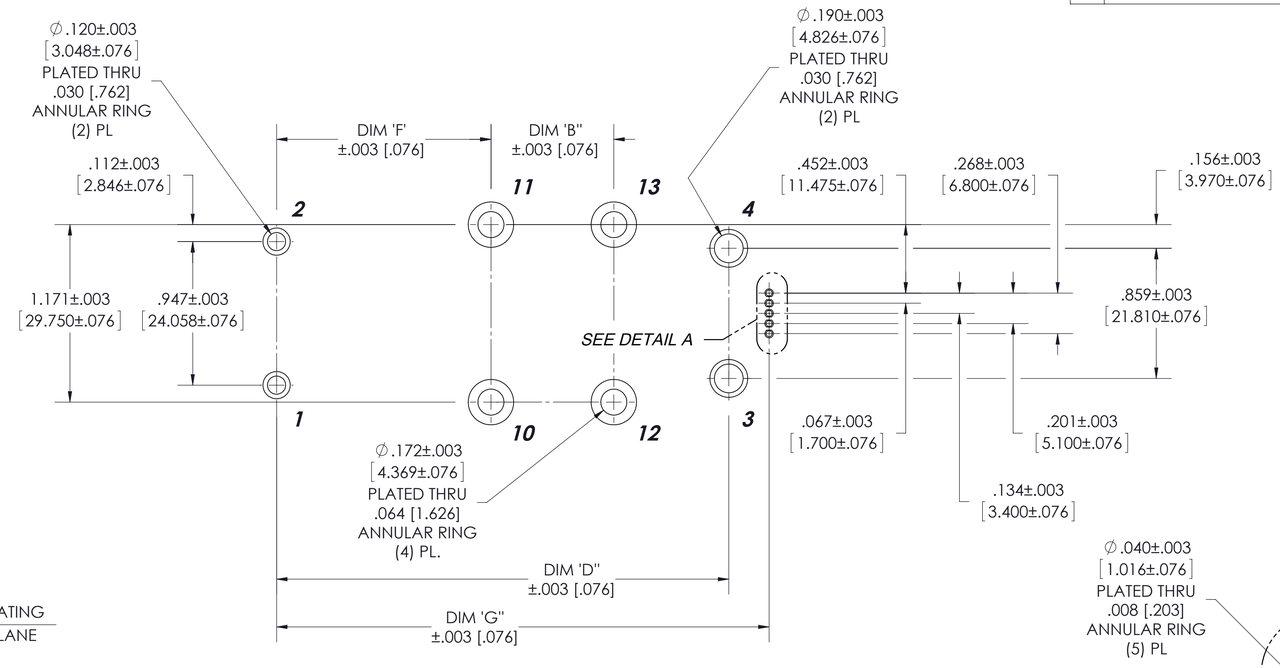

RECOMMENDED HOLE PATTERN
(COMPONENT SIDE)

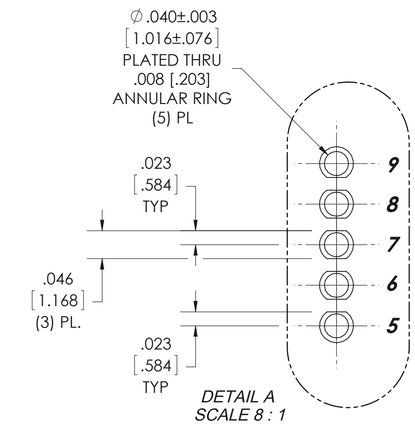

DETAIL A
SCALE 8 : 1

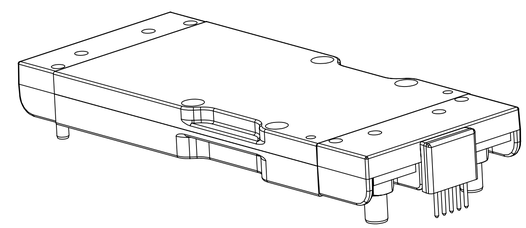

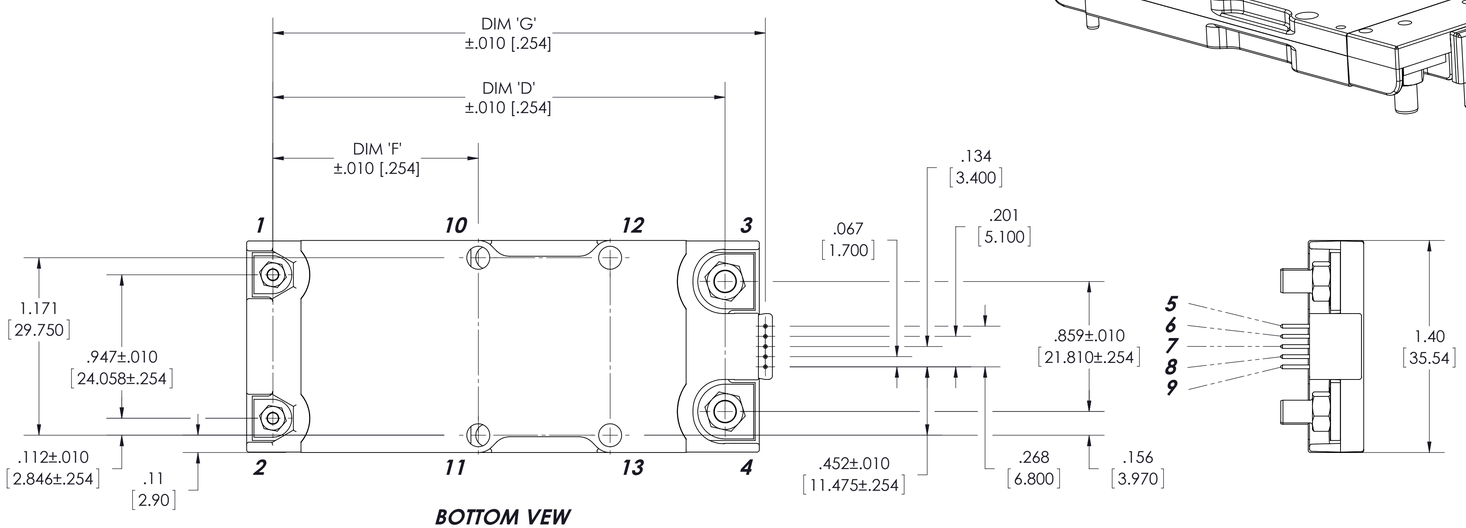

BOTTOM VEW

PRODUCT	DIM 'A'	DIM 'B'	DIM 'C'	DIM 'D'	DIM 'E'	DIM 'F'	DIM 'G'
2414 (0 STAGE) 2223	1.13 [28.70]	NA	2.38 [60.42]	1.984 [50.384]	2.47 [62.63]	.957 [24.304]	2.247 [57.073]
2814 (1 STAGE) 2223	1.59 [40.34]	NA	2.84 [72.05]	2.442 [62.017]	2.92 [74.26]	1.415 [35.945]	2.705 [68.706]
2914 (0 STAGE) 3623	1.13 [28.70]	.811 [20.593]	2.93 [74.30]	2.529 [64.236]	3.01 [76.51]	.957 [24.304]	2.792 [70.925]
3414 (1 STAGE) 3623	1.59 [40.34]	.811 [20.593]	3.38 [85.93]	2.988 [75.897]	3.47 [88.14]	1.415 [35.945]	3.251 [82.586]
3714 (1 STAGE) 4623	1.61 [40.93]	1.150 [29.200]	3.75 [95.13]	3.350 [85.092]	3.83 [97.34]	1.439 [36.554]	3.613 [91.781]
4414 (1 STAGE) 6123	1.61 [40.93]	1.757 [44.625]	4.35 [110.55]	3.957 [100.517]	4.44 [112.76]	1.439 [36.554]	4.221 [107.206
4914 (2 STAGE) 6123	2.17 [55.15]	1.757 [44.625]	4.91 [124.77]	4.517 [114.741]	5.00 [126.98]	1.999 [50.777]	4.781 [121.430]
5614 (1 STAGE) 9223	1.61 [40.93]	2.970 [75.445]	5.57 [141.37]	5.171 [131.337]	5.65 [143.58]	1.439 [36.554]	5.434 [138.026]

NOTES:

1- RoHS COMPLIANT PER CST-0001 LATEST REVISION.

2- SEE PRODUCT DATA SHEET FOR PIN DESIGNATIONS.

DRAWN BY	DATE
R.E.J. Hickey	1/26/2015

UNLESS OTHERWISE SPECIFIED DIMENSIONS ARE : INCH / [MM]
TOLERANCES ARE:
DECIMALS: X.XX [X.XX] = ±0.01 [0.25]
X.XXX [X.XXX] = ±0.005 [0.127]
ANGLES ±1°

THIRD ANGLE PROJECTION

DO NOT SCALE DRAWING

VICOR SWD

PROD OUTL PCB MNT W/CONN ADAPTER

SIZE	CAGE CODE	DWG NO	REV
D	67131	42028	3

SCALE 2:1 SHEET 1 OF 1