VICOR CONFIDENTIAL
THIS DOCUMENT AND THE DATA DISCLOSED HEREIN OR HEREWITH IS NOT TO BE REPRODUCED, USED, OR DISCLOSED IN WHOLE OR IN PART TO ANYONE WITHOUT PERMISSION OF VICOR CORP.

REV.	DESCRIPTION		DATE	APVD
1	RELEASE PER E100847	GCK	06/23/10	JR

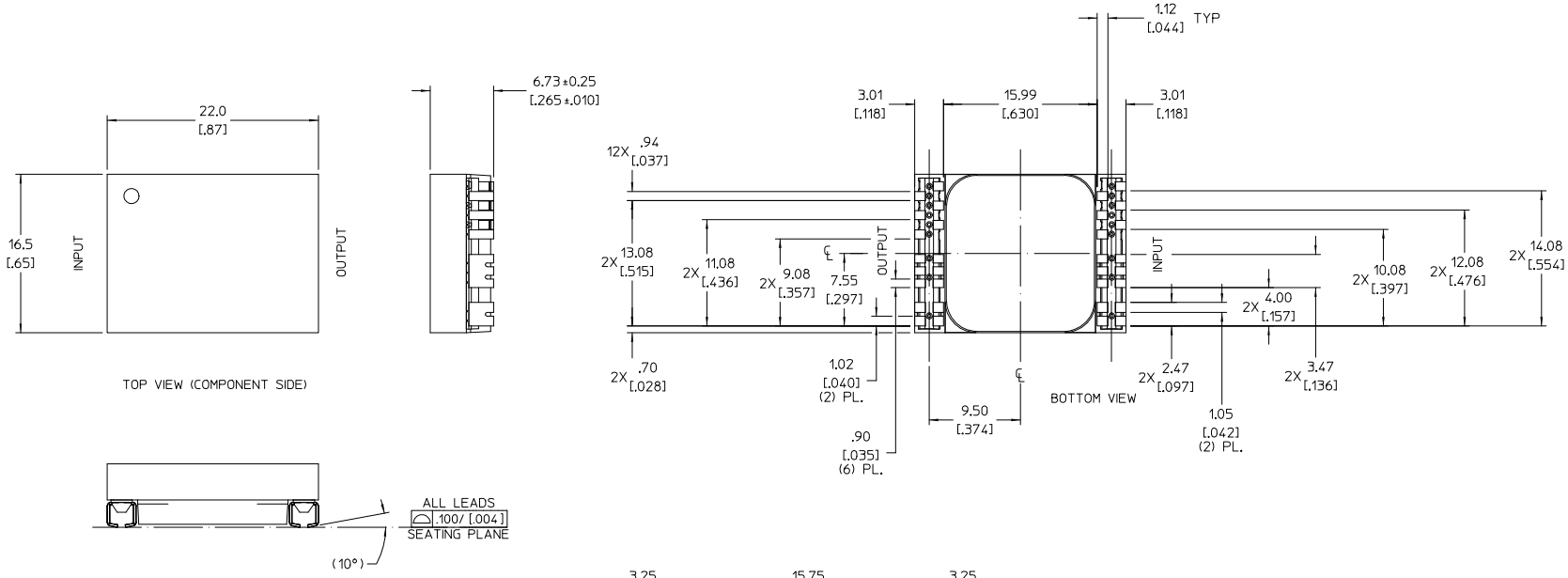

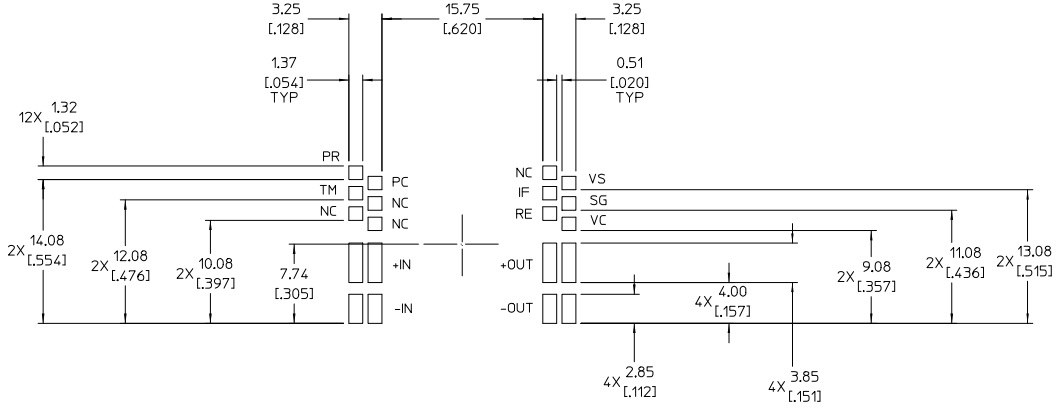

RECOMMENDED LAND PATTERN

(COMPONENT SIDE SHOWN)

NOTE

1. RoHS COMPLIANT PER CST-0001 LATEST REVISION

DRAWN BY	DATE
R.E. Hickey	04/14/08

UNLESS OTHERWISE SPECIFIED DIMENSIONS ARE MM [INCH]
TOLERANCES ARE:
DECIMAL ANGLES
XX [X.X] = ±0.25 [0.01] ±1°
XXX [X.XX] = ±0.127 [0.005]

THIRD ANGLE PROJECTION

DO NOT SCALE DRAWING

VICOR

J-LEAD 1/2 PRM2 (RS) PKC2
PRODUCTION OUTLINE

SIZE	CASE CODE	DWG NO	REV
D	67131	34749	1

SCALE 4:1 SHEET 1 OF 1