VICOR CONFIDENTIAL

THIS DOCUMENT AND THE DATA DISCLOSED HEREIN OR HEREWITH IS NOT TO BE REPRODUCED, USED, OR DISCLOSED IN WHOLE OR IN PART TO ANYONE WITHOUT PERMISSION OF VICOR CORP.

REV.	DESCRIPTION		DATE	APPROVED
1	RELEASED PER E050355	LEK	11/17/05	EF
2	PER E160690	GCK	08/02/16	MTB

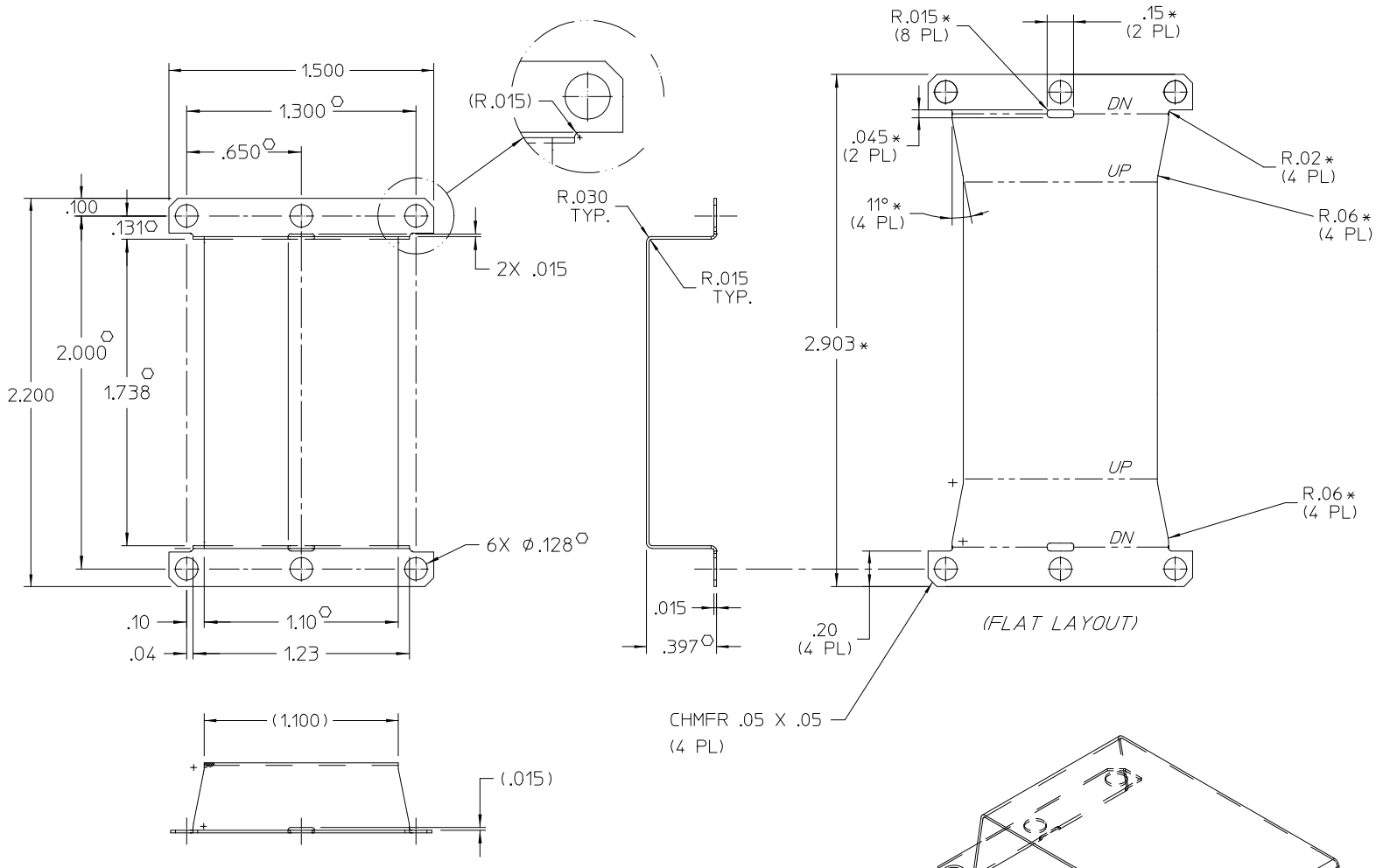

NOTES:

1. MATERIAL: ALUMINUM-(.015) THK, 3003-H14
2. REMOVE BURRS & SHARP EDGES
3. "*" DIMENSIONS ARE NOT FOR VICOR INSPECTION.'''
4. O DENOTES CRITICAL CHARACTERISTICS FOR LOT INSPECTION.

<> 5. CLEAR FINISH, ROHS COMPLIANT PER CST-0001 LATEST REVISION.
   A.) CHROMIUM FREE, OR
   B.) TRIVALENT CHROMIUM IN ACCORDANCE WITH MIL-DTL-5541, TYPE II, CLASS 1A OR 3.
   SEE CST-0003 FOR TYPES OF AVAILABLE FINISHES.

DRAWN BY	DATE
P.E.IENI	07/05/05

UNLESS OTHERWISE SPECIFIED DIMENSIONS ARE IN INCHES-
TOLERANCES ARE:
FRACTIONS ±1/64 DECIMALS .XX= ±.01 .XXX=±.005 ANGLES ±1°

THIRD ANGLE PROJECTION

DO NOT SCALE DRAWING

VICOR

SHIELD BASE PLATE SLOTTED (MINI)

SIZE	FSCM NO.	DWG NO	REV
C	67131	30198	2

SCALE 2:1 SHEET 1 OF 1