VICOR CONFIDENTIAL
THIS DOCUMENT AND THE DATA DISCLOSED HEREIN OR HEREWITH IS NOT TO BE REPRODUCED, USED, OR DISCLOSED IN WHOLE OR IN PART TO ANYONE WITHOUT PERMISSION OF VICOR CORP.

REV.	DESCRIPTION		DATE	APVD
1	RELEASED PER E080738	SA	4/11/08	REJH
2	REVISED PER E090393	GCK	02/24/09	REJH
3	REVISED PER E090487b	EM	03/19/09	RH

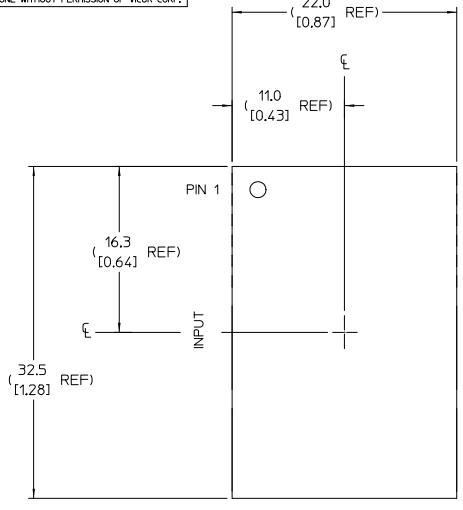

TOP VIEW (COMPONENT SIDE)

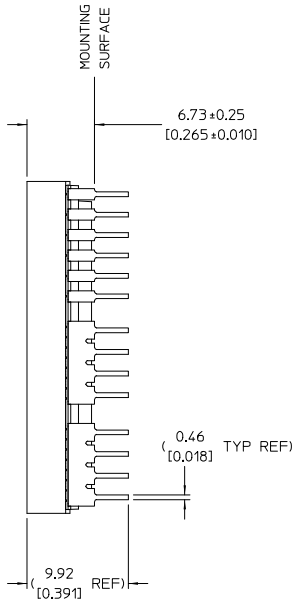

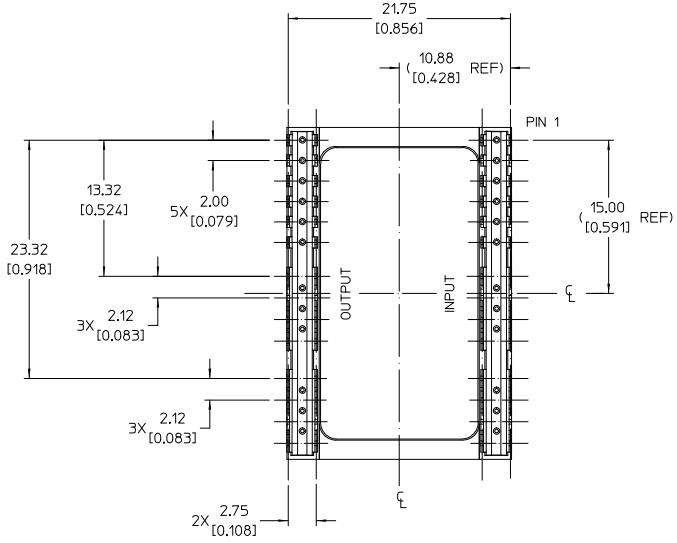

BOTTOM VIEW

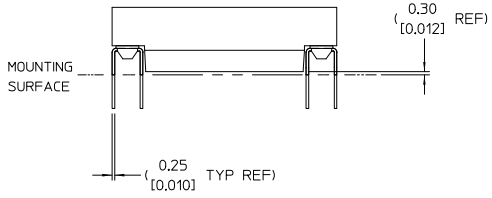

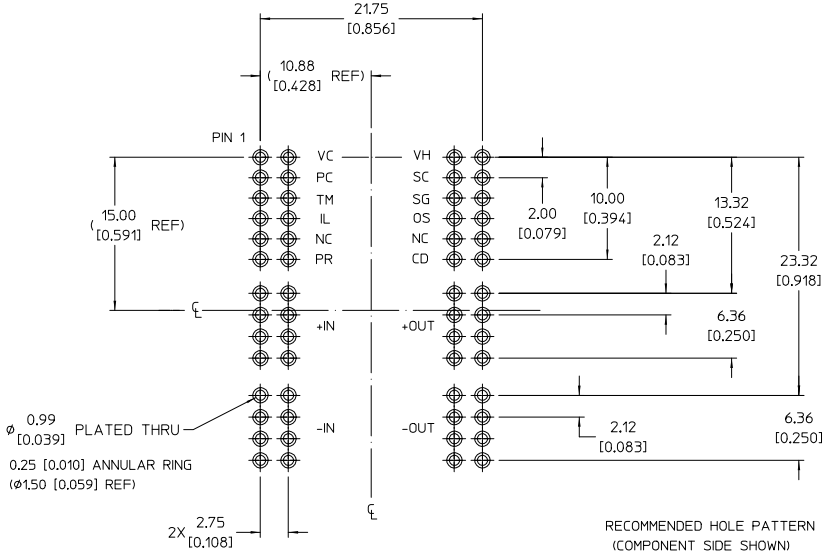

RECOMMENDED HOLE PATTERN
(COMPONENT SIDE SHOWN)

NOTES:

1. DIMENSIONS ARE MM [INCH]
2. UNLESS OTHERWISE SPECIFIED TOLERANCES ARE:
   X.X [X.XX] = ±0.25 [0.01]
   X.XX [X.XXX] = ±0.13 [0.005]
3. RoHS COMPLIANT PER CST-0001 LATEST REVISION

DRAWN BY	DATE
R.E. Hickey	07/18/08

UNLESS OTHERWISE SPECIFIED DIMENSIONS ARE IN INCHES
TOLERANCES ASSY
FRACTIONS ±1/64 DECIMALS .XX ±.01 .XXX ±.005 ANGLES ±1°
THIRD ANGLE PROJECTION
DO NOT SCALE DRAWING

VICOR

TH-LEAD, PRM
(AL) OUTLINE

SIZE	FSCM NO.	DWG NO	REV
D	67131	32938	3

SCALE 4:1 SHEET 1 OF 1